Installation Instructions

Vent Hood

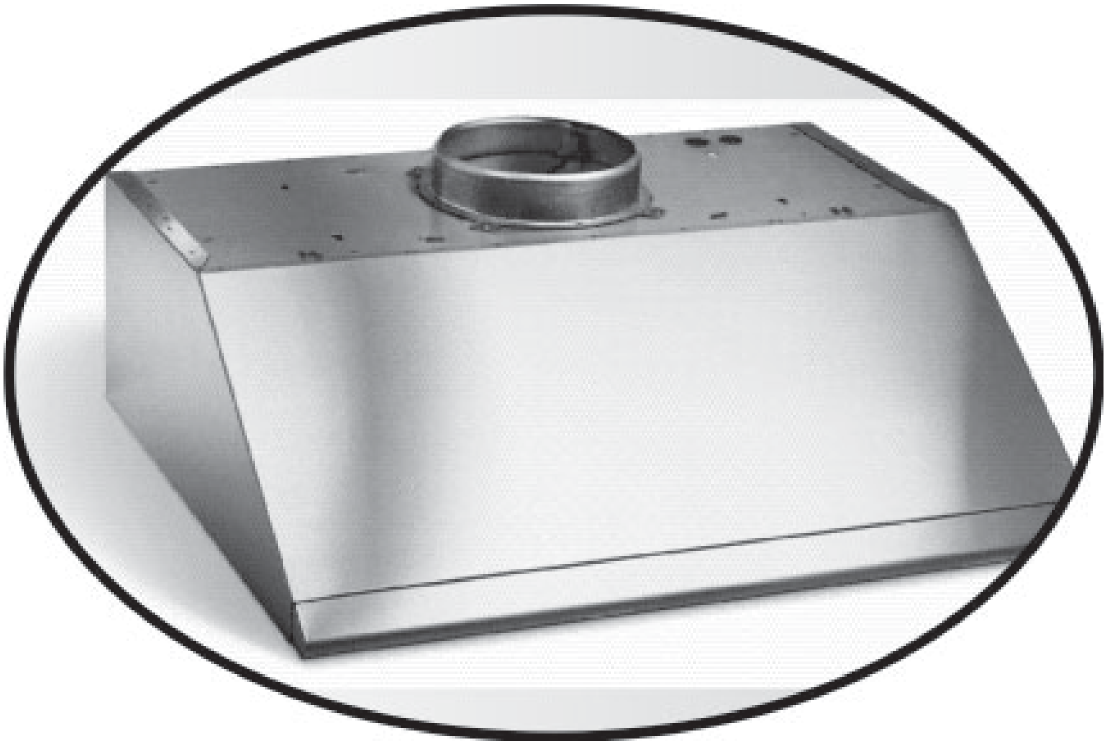

Electrolux

E30WV60EPS E36WV60EPS E48WV12EPS E308WV60ES E368WV60ES E488WV120S 5995438602

2 Finding Information

READ AND SAVE THESE INSTRUCTIONS

Attach your sales receipt to this page for future reference.

NOTE

Installer: Leave instructions with owner.

Owner: Read your Hood Use & Care Manual. It contains important safety information for operating this appliance. It also has many suggestions for getting the best results from your hood.

Read all instructions before installing the hood.

For your safety, please read and observe all safety instructions. This guide will help you anticipate all installation connections.

QUESTIONS?

For toll-free telephone support in the U.S. and Canada:
1-877- 4ELECTROLUX (1-877-435-3287)

For online support and Internet product information:
www.electroluxusa.com

©2005 Electrolux Home Products, Inc.
Post Office Box 212378, Augusta, Georgia 30917, USA
All rights reserved. Printed in the USA

TABLE OF CONTENTS

Finding Information **2**
Please Read And Save This Guide 2
Questions 2
Table Of Contents 3

Safety **4**
Important Safety Instructions 4

Preparing for Installation **7**
Verifying Package Contents 7
Installation Planning 7
Specifications and Dimensions 8

Exhaust Duct Locations **9**
Duct Locations 9

Duct Preparation **11**

Cabinet Preparation **13**
Preparing the Cabinets 13

Electrical Power Supply **14**
Requirements 14

Installation **15**
Installing the Hood 15
Making the Electrical Connection 16

Operation **17**
Verifying the Operation 17

IMPORTANT SAFETY INSTRUCTIONS

Safety Precautions

Do not attempt to install or operate your unit until you have read the safety precautions in this manual. Safety items throughout this manual are labeled with a Warning or Caution based on the risk type.

Definitions

⚠ This is the safety alert symbol. It is used to alert you to potential personal injury hazards. Obey all safety messages that follow this symbol to avoid possible injury or death.

⚠ WARNING

WARNING indicates a potentially hazardous situation which, if not avoided, could result in death or serious injury.

⚠ CAUTION

CAUTION indicates a potentially hazardous situation which, if not avoided, may result in minor or moderate injury.

CAUTION

CAUTION used without the safety alert symbol indicates a potentially hazardous situation which, if not avoided, may result in property damage.

IMPORTANT

Indicates installation, operation or maintenance information which is important but not hazard related.

SAFETY PRECAUTIONS

⚠ WARNING

- Read all instructions before using this appliance.
- Install or locate this appliance only in accordance with these installation instructions.
- Do not operate this appliance if it has a damaged electrical conduit or wires, if it is not working properly or if it has been damaged or dropped.
- To reduce the risk of fire, electric shock, or injury to persons, observe the following:
  - a) Installation work and electrical wiring must be done by qualified person(s) in accordance with all applicable codes and standards, including fire-rated construction.
  - b) Sufficient air is needed for proper combustion and exhausting of gases through the flue (chimney) of fuel burning equipment to prevent back drafting. Follow the heating equipment manufacturer's guidelines and safety standards such as those published by the National Fire Protection Association (NFPA), and the American Society for Heating, Refrigeration and Air Conditioning Engineers (ASHRAE), and the local code authorities.
  - c) When cutting or drilling into wall or ceiling, do not damage electrical wiring and other hidden utilities.
  - d) Ducted fans must always be vented outdoors.
  - e) Use this unit only in the manner intended by the manufacturer. If you have questions, contact the manufacturer.
  - f) Before servicing or cleaning unit, switch power off at service panel and lock the service disconnecting means to prevent power from being switched on accidentally. When the service disconnecting means cannot be locked, securely fasten a prominent warning device, such as a tag, to the service panel.
- To reduce the risk of fire, use only metal ductwork.
- Grounding Instructions

  This appliance must be grounded. In the event of an electrical short circuit, grounding reduces the risk of electric shock by providing an escape wire for the electric current. This appliance is equipped with a cord having a grounding wire with a grounding plug. The plug must be plugged into an outlet this is properly installed and grounded.
- Improper grounding can result in a risk of electric shock.
- Consult a qualified electrician if the grounding instructions are not completely understood, or if doubt exists as to whether the appliance is properly grounded.

⚠ WARNING

- Do not use an extension cord. If the power supply cord is too short, have a qualified electrician install an outlet near the appliance.
- This appliance should be serviced only by qualified service personnel. Contact the nearest Electrolux authorized servicer at (877) 435-3287, or at www.electroluxusa.com for examination, repair or adjustment.
- If the information in this manual is not followed exactly, a fire or explosion may result causing property damage, personal injury, or death.
- Do not store or use gasoline or other flammable vapors and liquids in the vicinity of this or any other appliance.
- Improper installation, adjustment, alteration, service, or maintenance can cause personal injury or property damage. Refer to these instructions and the accompany-ing Use & Care Manual. For assistance or additional information, consult a qualified installer, service agency, or dealer.
- Keep appliance area clear and free from combustible material.
- For general ventilating use only. Do not use to exhaust hazardous or explosive materials and vapors.
- To reduce the risk of a range top grease fire:
  a) Never leave surface units unattended at high settings. Boilovers cause smoking and greasy spillovers that may ignite. Heat oils slowly on low or medium settings.
  b) Always turn hood ON when cooking at high heat or when cooking flaming foods.
  c) Clean ventilating fans frequently. Grease should not be allowed to accumulate on fan or filter.
  d) Use proper pan size. Always use cookware appropriate for the size of the surface element.

VERIFY PACKAGE CONTENTS

- Use and Care Manual
- Suction Cup

INSTALLATION PLANNING

A qualified installer must complete the installation of this built-in appliance. Proper installation is your responsibility.

Carefully check the location where the hood is to be installed. The hood should be placed for convenient access. Make certain that electrical power can be provided in the selected location.

Plan the installation so that all minimum clearances are met or exceeded. Dimensions shown provide minimum clearances, unless otherwise noted.

The specified minimum cabinet depth and width must be provided.

Cabinet cutout dimensions must be used as indicated. All contact surfaces between the appliance and the cabinet must be solid and level.

Make certain that you have everything necessary to ensure a proper installation before proceeding.

8 Specifications and Dimensions

NOTE

All dimensional tolerances are + 1/16", - 0" unless otherwise stated.

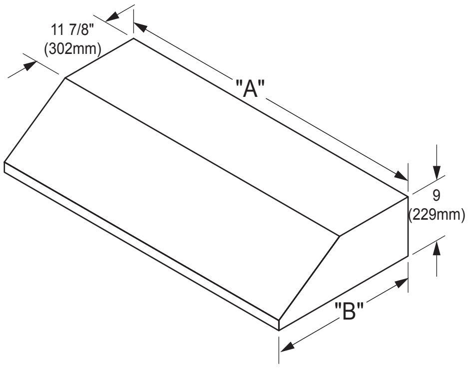

Overall Dimensions
Isometric View
(9" hood shown)

Figure 1

9" Hood Overall Dimensions		
Model	Width "A"	Width "B"
E30WV60EPS	29 7/8" (759mm)	23 13/16" (605mm)
E36WV60EPS	35 7/8" (911mm)	23 13/16" (605mm)
E48WV12EPS	47 7/8" (1216mm)	23 13/16" (605mm)

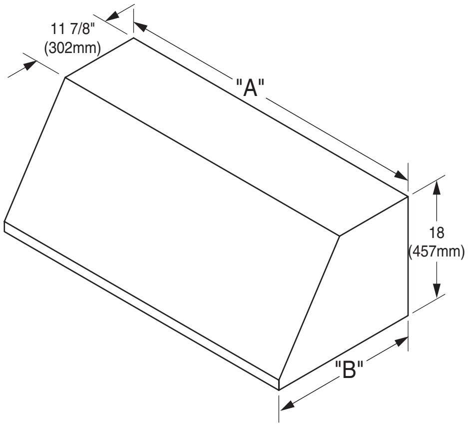

Overall Dimensions
Isometric View
(18" hood shown)

Figure 2

18" Hood Overall Dimensions		
Model	Width "A"	Width "B"
E308WV60ES	29 7/8" (759mm)	26 13/16" (681mm)
E368WV60ES	35 7/8" (911mm)	26 13/16" (681mm)
E488WV120S	47 7/8" (1216mm)	26 13/16" (681mm)

DUCT LOCATIONS

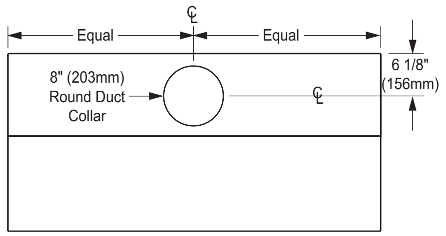

Vertical Exhaust Duct Location
E30WV60EPS, E36WV60EPS, E308WV60ES, E368WV60ES
Top View

Figure 3

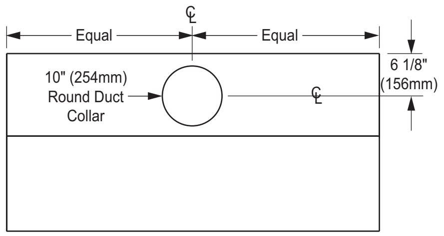

Vertical Exhaust Duct Location
E488WV120S
Top View

Figure 4

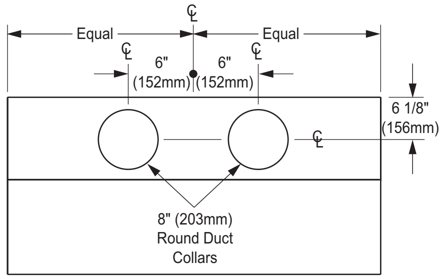

Vertical Exhaust Duct Location
E48WV12EPS
Top View

Figure 5

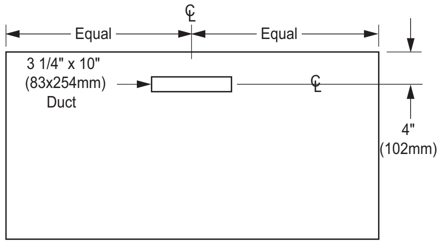

Horizontal Exhaust Duct Location
E308WV60ES, E368WV60ES
Rear View

Figure 6

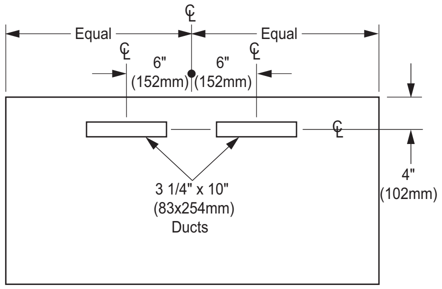

Horizontal Exhaust Duct Location
E488WV120S
Rear View

Figure 7

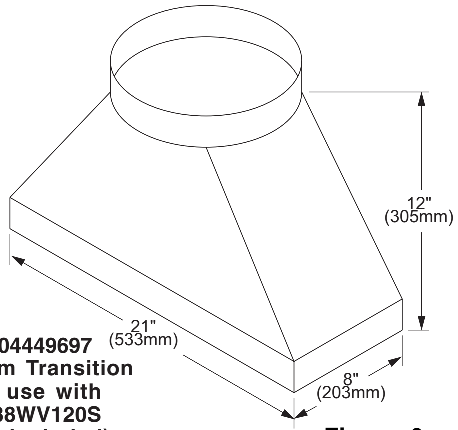

5304449697
Custom Transition
for use with
E488WV120S
(not included)

Figure 8

ELECTRICAL CONDUIT LOCATIONS

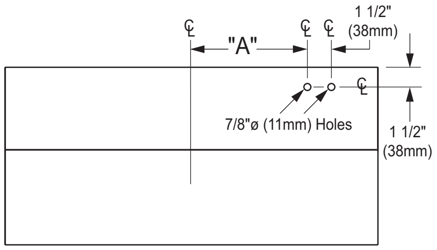

Conduit Location
E30WV60EPS, E36WV60EPS, E48WV12EPS, E308WV60ES, E368WV60ES, E488WV120S
Top View
9" and 18" Hoods

Figure 9

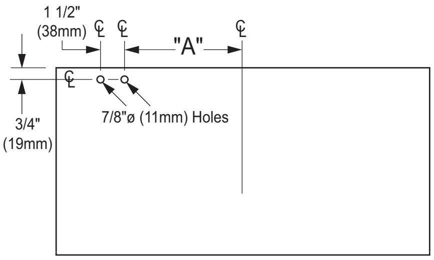

Conduit Location
E308WV60ES, E368WV60ES, E488WV120S
Rear/Back View
18" Hoods

Figure 10

Electrical Conduit Locations	
Model No.	**Dimension "A" Conduit Location**
E30WV60EPS E308WV60ES	9" (752mm)
E36WV60EPS E368WV60ES	8" (203mm)
E48WV12EPS E488WV120S	14 7/16" (367mm)

DUCT PLANNING

⚠ WARNING

- To reduce the risk of fire and to properly exhaust air, ducted fans must be vented to outside. Do not vent exhaust air into spaces within walls, ceilings, attics, crawl spaces or garages.
- Improper installation, adjustment, alteration, service, or maintenance can cause personal injury or property damage.
- To reduce the risk of fire, use only duct work materials deemed acceptable by state, municipal and local codes.

IMPORTANT

- Best performance is achieved by using round duct instead of rectangular, especially when elbows are required.
- If multiple elbows are needed, ensure that there is a minimum of 24" of straight duct between any two elbows.
- Avoid "S" or "back to back" configurations caused by adjacent elbows.
- Thermal breaks, such as a short section of non-metallic duct, should be used in areas of extreme cold.
- A back-draft damper at the duct outlet may also be required.
- Do not use flexible metal duct.
- Do not use duct work that is smaller in cross-sectional area than the recommended size duct.
- Do not rely on duct tape alone to seal duct joints. Use sheet metal screws as require to support the duct weight.
- The vent hood and cooking appliance(s) must be removable if service is required.
- Be certain that the duct work does not interfere with floor joists or wall studs.
- It is important to keep a minimum number of turns in the duct run, and to keep the run as short as possible.
- Do not restrict the air flow by reducing the duct cross-sectional areas when making hard joints or squeezing through a tight area.
- With concrete slab construction, "box-in" the duct work to prevent it from collapsing when the wet concrete is poured. Also allow room for electrical conduit.
- Cross-drafts or air currents caused by adjacent open windows or doors, HVAC outlets, and ceiling fans reduce vent efficiency.

Duct Preparation

IMPORTANT

- Tape all duct joints securely to prevent combustion by-products, smoke or odors from entering the home. This will also improve the efficiency of the system.
- Do not exhaust more than one vent into a single duct run.
- Only use ductwork constructed of materials deemed acceptable by state, municipal and local codes.

Refer to the table below for recommended maximum straight lengths of duct to provide adequate performance.

Model	Duct Size	Maximum Equivalent Straight Lengths
E30WV60EPS E36WV60EPS E48WV12EPS E308WV60ES E368WV60ES E488WV120S	10” 3 1/4” x 10”	50’ 50’
E30WV60EPS E36WV60EPS E308WV60ES E368WV60ES	8”	60’

Refer to the table below for recommended sheet metal elbows, transitions, and wall cap equivalent straight lengths.

Recommended sheet metal elbows, transition, and wall cap equivalent straight lengths

3 1/4" x 10" 90° Elbow 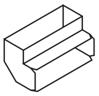 15 Feet	3 1/4" x 10" 45° Elbow 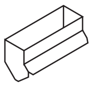 7 Feet	3 1/4" x 10" Wall Cap 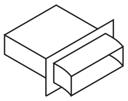 2 Feet	3 1/4" x 10" 90° Flat Elbow 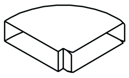 20 Feet
Transistion 3 1/4" x 10" to Round 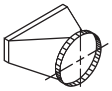 8" Diameter - 4 Feet 10" Diameter - 4 Feet	45° Elbow - Round Duct 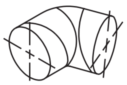 8" Diameter - 3 Feet 10" Diameter - 2 Feet	90° Transistion 3 1/4" x 10" to 8" Round 25 Feet	90° Elbow - Round Duct 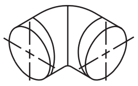 8" Diameter - 7 Feet 10" Diameter - 5 Feet

PREPARING THE CABINET

⚠ WARNING

- **Failure to provide proper minimum clearance may result in a fire or safety hazard.**
- **To reduce the risk of personal injury caused by reaching over a hot appliance, cabinet storage space located directly above the cooktop should be avoided.**
- **Do not store combustible materials or items adversely affected by heat in cabinet areas above the appliance.**
- **Follow the instructions regarding minimum safe clearances and installation location. Failure to do so may result in a fire or safety hazard.**

Minimum hood clearances are zero inches (0”) to the rear, sides and top of the hood.

Thirty inches (30”) is the minimum distance between the bottom of the hood and any cooking surface.

Maximum effective clearance from cooking surface to bottom of hood is 36” (914mm).

Electrical Power Supply

REQUIREMENTS

⚠ **WARNING**

Failure to disconnect power may result in electrical shock or fire hazard! If the electric service provided does not meet the product specifications, do not proceed with the installation. Call the selling dealer or a licensed electrician.

It is the owner's responsibility to ensure that the electrical connection of this appliance is performed by a qualified electrician. The electrical installation including minimum supply wire size and grounding, must be in accordance with the latest revision of the National Electric code ANSI/NFPA and local codes and ordinances.

A copy of this standard may be obtained from:

National Fire Protection Association
1 Batterymarch Park
Quincy, Massachusetts 02269-9101

The correct 120VAC, 60Hz, 15A circuit must be supplied for this appliance from a separate, grounded, circuit that is protected by a properly sized circuit breaker or time delay fuse.

INSTALLING THE HOOD

First temporarily mount a 2x4 ledger board 30" (762mm) from the finished countertop. Then, remove the filters from the hood canopy and remove the shields below the power ventilator. Secure the hood through the keyhole slots in the top of the hood and/or the slot hole in the rear of the hood. Remove the temporary support ledger.

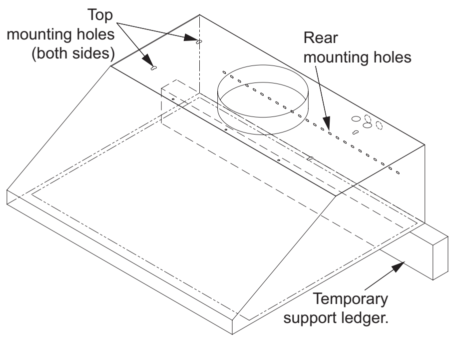

Temporary Support Ledger Installation (9" Shown)

Figure 11

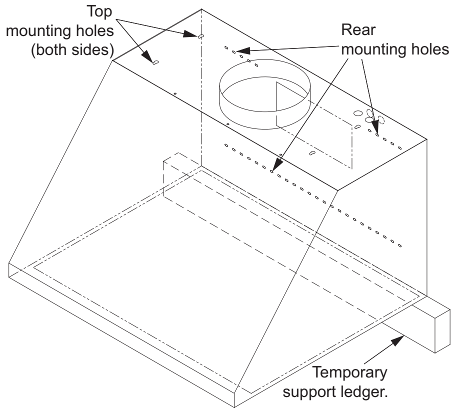

Temporary Support Ledger Installation (18" Shown)

Figure 12

MAKING THE ELECTRICAL CONNECTION

⚠ WARNING

- **Ensure that the power supply is disconnected before proceeding.**
- **Verify that the power supply matches the ratings found on the appliance data plate before proceeding.**
- **The complete appliance must be properly grounded at all times when electrical power is applied.**
- **Do not ground the appliance with the neutral (white) house supply wire. A separate ground wire must be utilized.**
- **If aluminum house supply wiring is used, splice the appliance copper wires to the aluminum house wiring with special connectors designed and agency-certified for this purpose. Follow the connector manufacturer's recommended procedure carefully. Improper connection can result in a fire hazard.**
- **Failure to complete electrical connections properly may result in a damaged or nonfunctional system. Follow the wiring diagrams carefully to ensure a proper installation.**

Figure 13

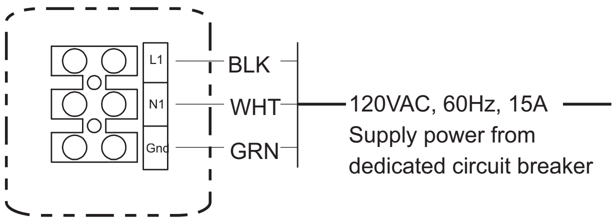

Hood Wiring Diagram

Electrical power source wiring can be connected through the top or back of the hood. Access the wiring inside the hood canopy in the area to the right side of the power ventilator.

Connect the pre-wired 12" long black, white and green wires to the corresponding black, white and ground (green) wire from the power source wiring. Use wire nut connectors to secure the connections.

VERIFYING THE OPERATION

⚠ **WARNING**

- **If the hood is not operational after completion of the installation, do not attempt to repair it. See the Problem Solving section of the Use & Care Guide, then call a qualified service technician if the system is still not functional.**
- **Always disconnect the appliances from the electrical power when servicing them.**

- Install the filters.
- Verify that the hood control knobs are in the OFF position.
- Turn on the main power supply.
- The hood has two knobs that control the function of the hoods Halogen lights and the exhaust blower. Turning the knobs clockwise will turn on the lights and the blower. The blower has a variable speed range between settings.